102 (33)

THE BODY

ABS CYCOLAC®

TABLE OF CONTENTS

FOREWORD

ABS plastics (a terpolymer of acrylonitrile, butadiene and styrene) are virtually indestructible. Should repairs ever be necessary however, those methods adaptable to CYCOLAC® and CYCOLOY® brand ABS—manufactured by Borg-Warner Chemicals are covered in this brochure. They are based on procedures developed at Borg-Warner Chemicals, and on recommendations provided by ABS users in the field. Each section deals with a particular type of repair, summarizes, and illustrates the procedures believed to be most suitable for this work.

® CYCOLAC and CYCOLOY are registered trademarks of Borg-Warner Corporation.

SURFACE SCRATCHES, ABRASION, GROUND-IN-DIRT

Perhaps surface scratches, abrasion and dirt particles in the plastic surface are the most frequent types of damage encountered with ABS. Although these conditions normally do not cause physical damage to CYCOLAC or CYCOLOY, they can detract from product appearance and should be corrected.

Shallow scratches and abraded surfaces are generally remedied by following directions on the containers of conventional automotive buffing and rubbing compounds such as Du Pont #7®, Ram Chemical #69 x 1® or Mirror Glaze #1® They usually are available locally in automotive supply stores.

Fantastic® spray household cleaner has proved the most effective of mild household cleaners in removing surface dirt from ABS. However, if large dirt particles are embedded in the plastic skin, they ordinarily are removed with a heating device (for example, a hot air gun) capable of supplying hot air in the temperature range of 300° -400° F. Using particular care not to overheat the plastic, hold the nozzle of the heating unit about 1/4 in. away from the surface and apply heat with a circular motion until the soiled area is sufficiently soft to remove the dirt particles. The ABS will return to its original shape upon cooling.

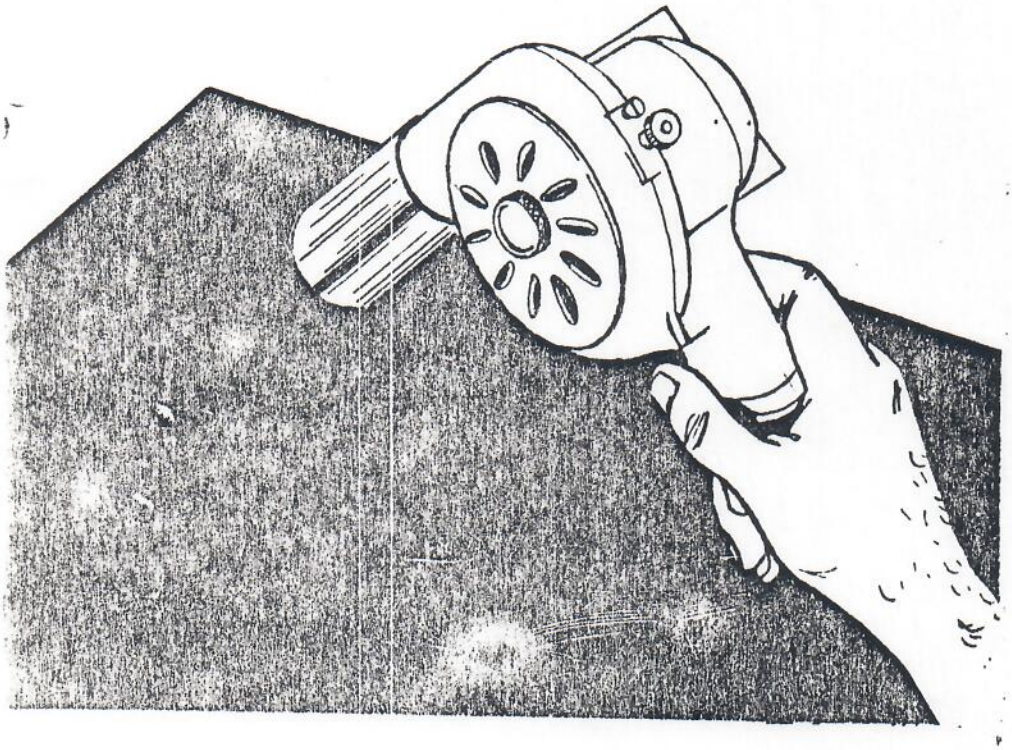

DEEP SCRATCHES, SHALLOW NICKS, SMALL HOLES

When repairing deep scratches, shallow nicks, or small holes (less than 1 in. in diameter) the following materials are suggested

1. ABS solvent cements
2. Epoxy patching compounds
3. Hot melt adhesives
4. Heated ABS rods

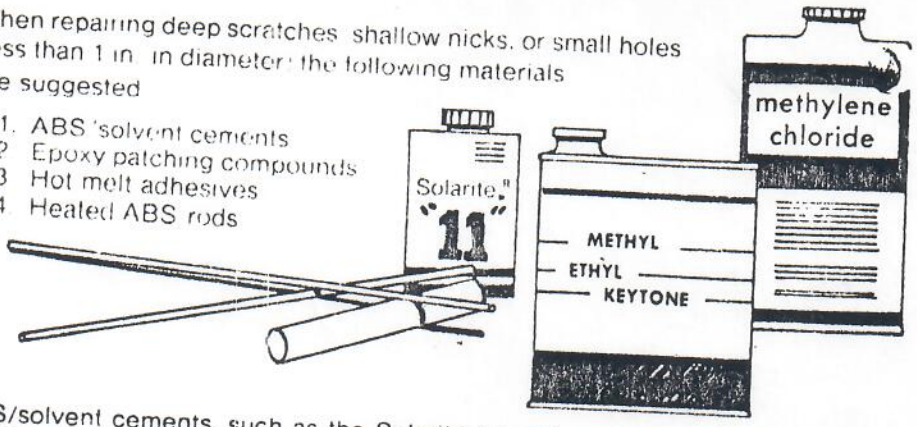

ABS/solvent cements, such as the Solarite 11 series, were developed to fit virtually any application. They are manufactured and marketed by Solar Compounds Corporation. Where the area to be repaired is extremely small, it may be quicker to make a satisfactory cement by dissolving ABS pellets in a solvent such as methyl ethyl ketone or methylene chloride. The pellets are added to the solvent until the desired paste-like conistency is achieved. This mixture is then applied to the damaged area with a squeeze bottle, putty knife, spatula, trowel or other similar applicator. Upon solvent evaporation, the hard, durable solids remaining can easily be shaped to the product's contour by sanding or filing. Solvent adhesives are not recommended for highly stressed areas, on thin walled parts, or for patching holes greater than 1/4 in. in diameter.

® Solarite is reg. trademark of Solar Compounds Corporation. Box 227 Linden, N.J. 07036

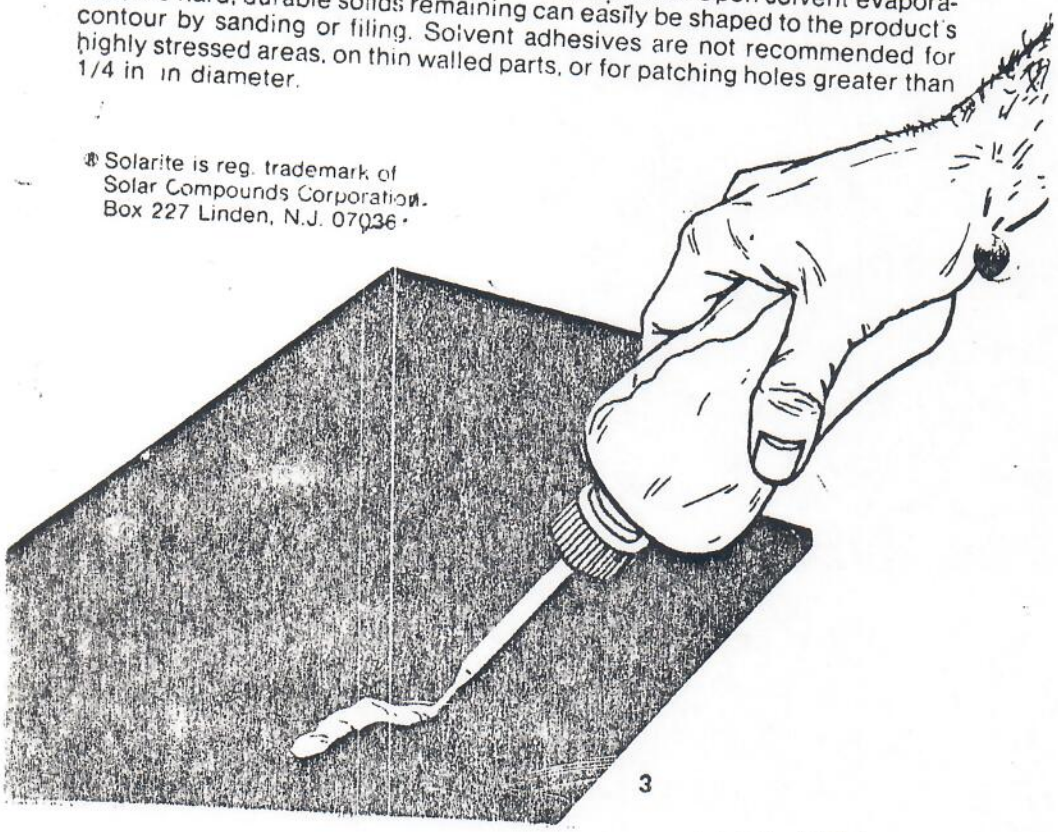

Solar also has developed and made commercially available Solarite 400, a fast curing, easily sanded, modified epoxy patching compound for repairing ABS. Solarite 400 is mixed in equal portions of resin and hardener, preferably on a hard flat surface, then applied to the damaged area with tools such as a putty knife, spatula, etc. Preliminary cleaning of the damaged area with perchlorethylene or VM&P naptha will generally insure a good bond between the epoxy compound and the ABS substrate. Adhesion can be increased by roughing the bonding surface with sandpaper or equivalent, and by utilizing as much surface area for bonding as possible. To complete the repair, a mechanical sander can be used, providing it is kept in constant motion to prevent heat build-up

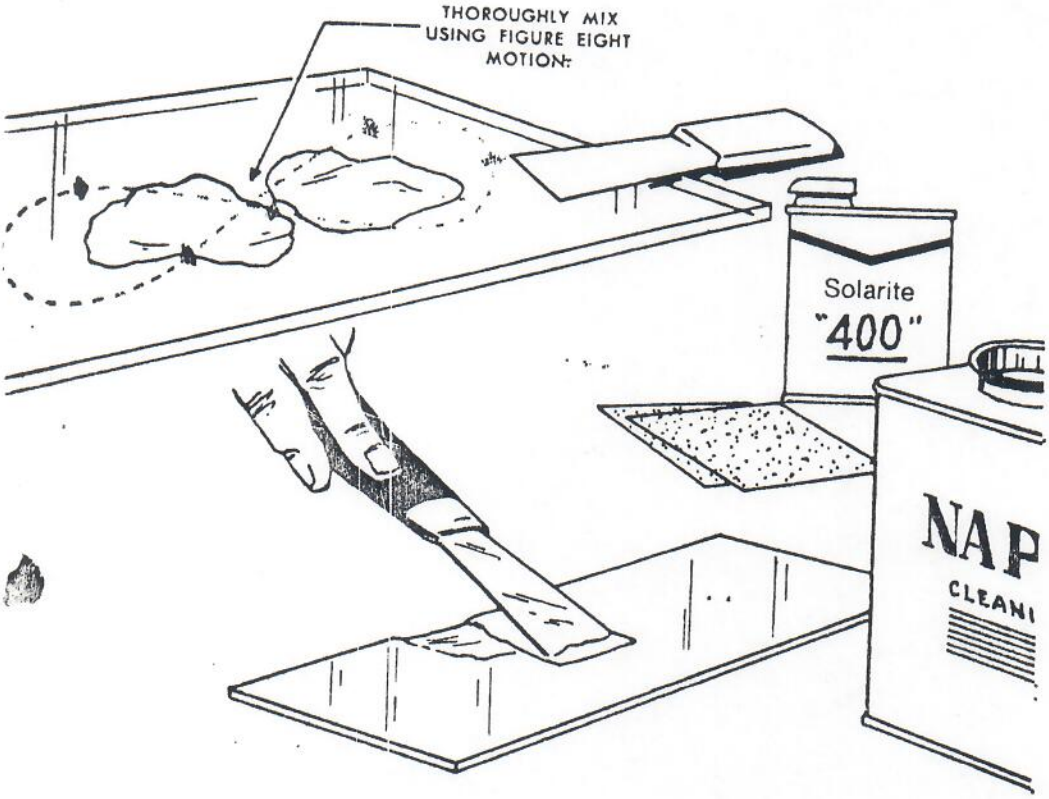

Hot melt adhesvies, polyamids, are supplied in stick form (1/2 in. diameter x 3 in. long) and can be applied directly to the damaged area with a hot melt gun. Although hot melts adhere well to ABS, and can be used for a variety of repairs, they should be used only in areas involving little or no shear stress because of their low cohesive strength. The gun and adhesive sticks are available through Sears Roebuck & Co., and most hardware stores.

Heating ABS rods with a hot air gun and welding them to the damaged material may seem slow when compared to the preceding repair methods, but in some applications hot air welding could prove the most effective technique to use. A repair utilizing this procedure is primarily intended for small holes, indentations, or cracks in the plastic surface where high stress is apparent or thin walled sections are used. To weld, the hot air gun should be held in such a manner as to direct the flow of hot air into the fusion zone heating the damaged area and the welding rod both uniformly and simultaneously. The gun should be moved continuously in a fanning motion as it is moved along the weld to prevent discoloration of the ABS, and enough pressure must be maintained on the rod to insure good adhesion. If the process is carefully performed, overheating of the ABS will be avoided and a firm bond will be achieved. After the repair is completed, sanding is permissible to obtain a surface finish of acceptable appearance.

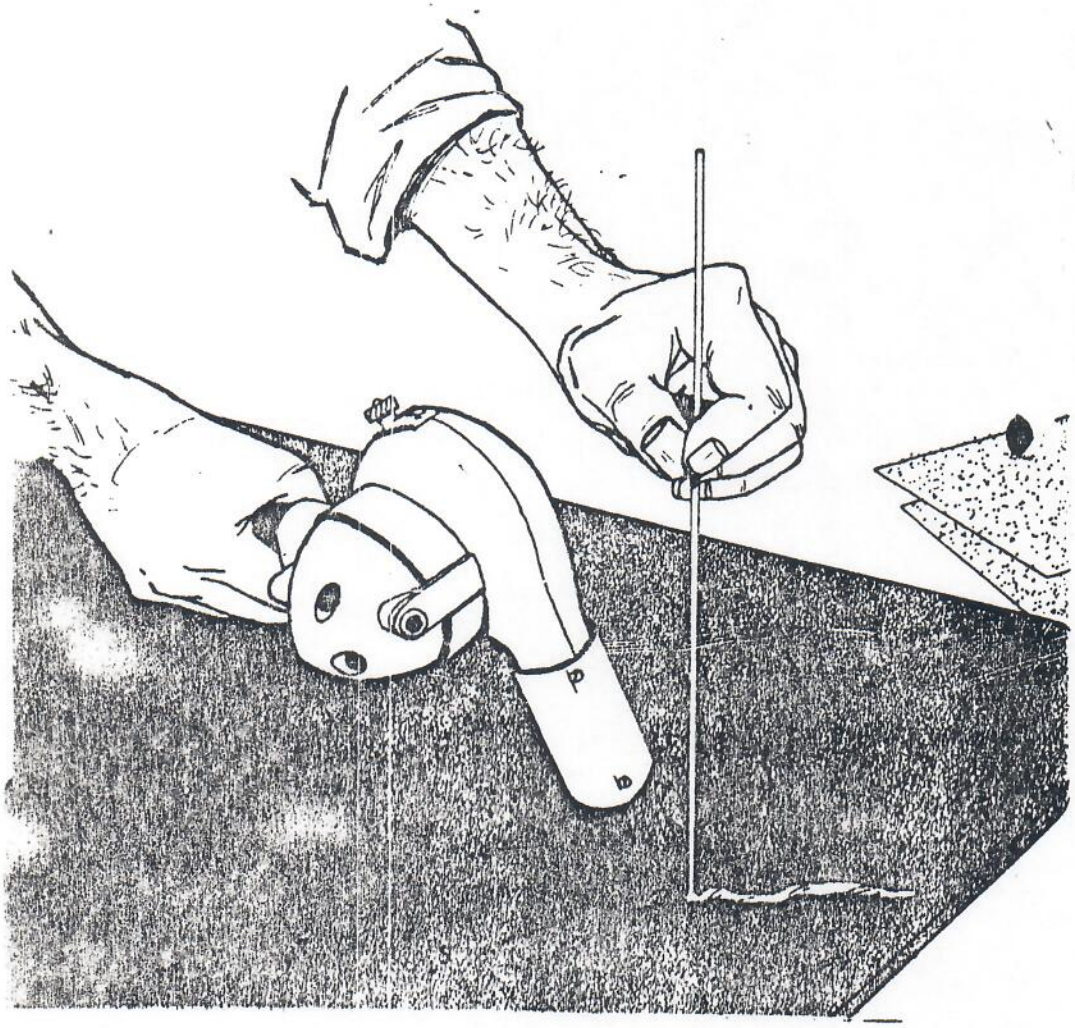

CRACKS

To successfully repair a crack in ABS, its origin must first be determined, then alleviated to prevent its recurrence after the repair has been made. The preferred method is to drill a small hole at each end of the crack to stop crack extension. Next, a scab plate is bonded to the reverse side of the damaged area to provide extra strength to the product. The crack is then "V" grooved and filled with an ABS solvent cement, hot melt adhesive, epoxy patching compound, or sealed using the hot air welding technique. After drying or cooling, the patched area is sanded to match the surrounding surface finish.

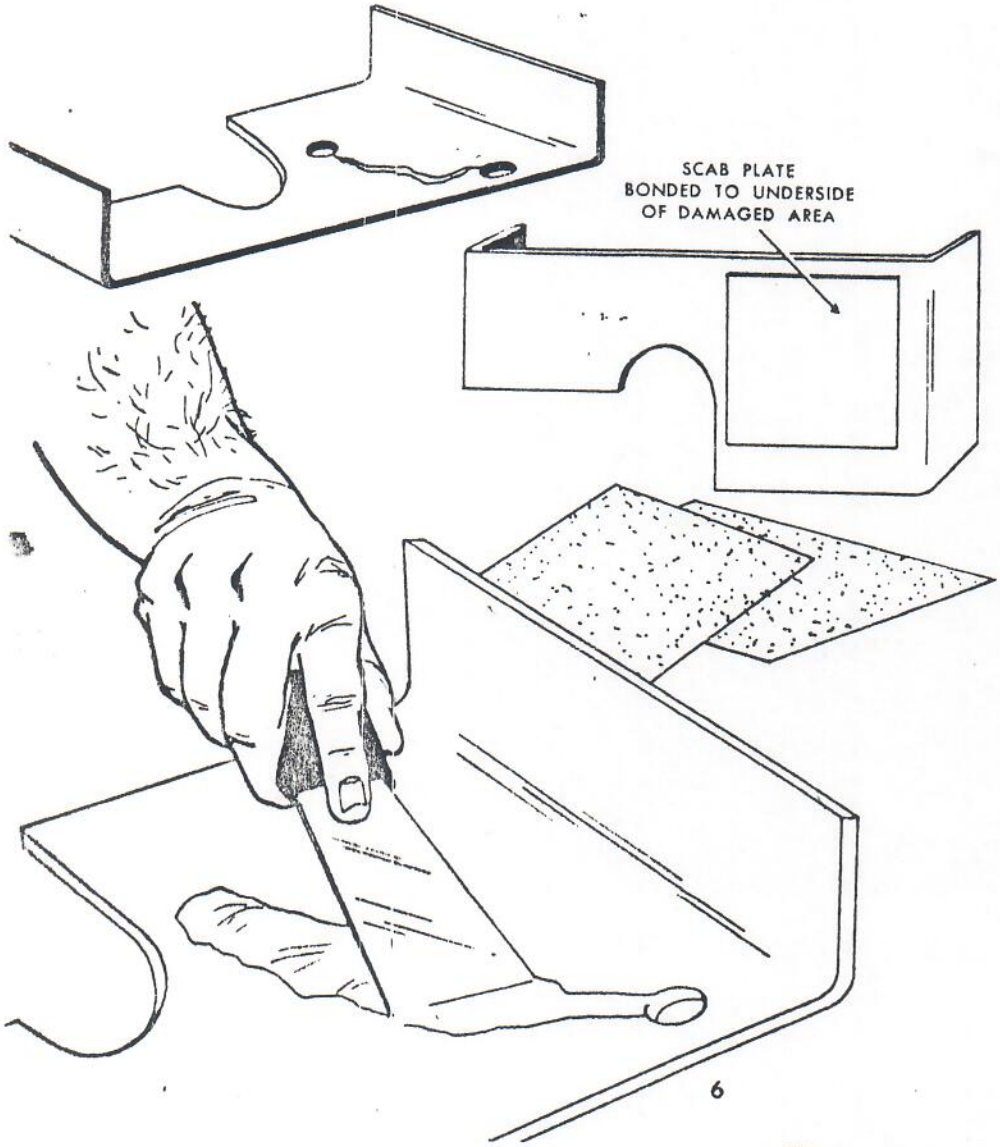

REPAIRING MAJOR DAMAGE

This section deals primarily with major repairs on composite ABS structures: however, if a scab plate is used, these same repairs may also be applied on single skin applications

Where the appearance is secondary, the simplest way of repairing large holes, (1 in. or larger in diameter), tears, etc in CYCOLAC or CYCOLOY is to patch over the damaged area with a piece of ABS extruded sheet. The sheet is cut slightly larger in circumference than the section to be repaired It is then coated with a solvent adhesive, firmly attached over the damaged area and let dry approximately one hour before any sanding or additional finishing operations are performed.

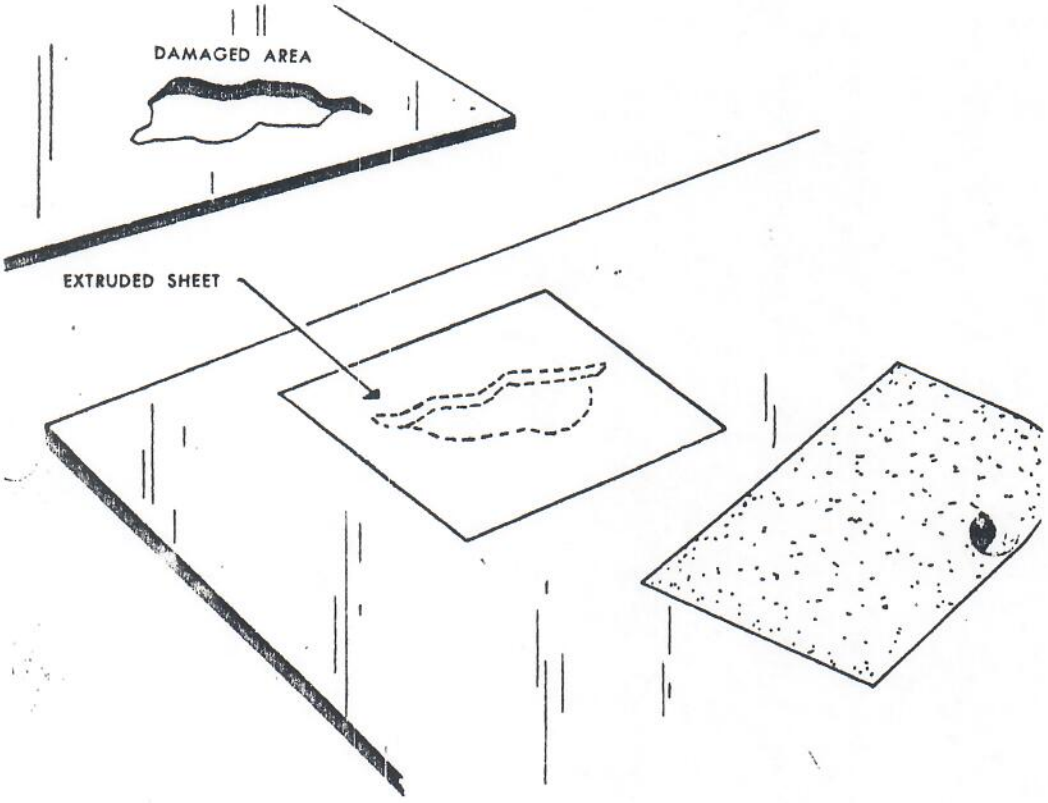

When appearance is important, large holes, cracks, tears, etc. can be repaired by cutting out the damaged area and replacing it with an ABS piece of similar size and thickness. In cutting out the damaged area, a smooth edge must be maintained to eliminate the notch effect common to all thermoplastics The remaining seam is filled with a repair material, sanded and finished

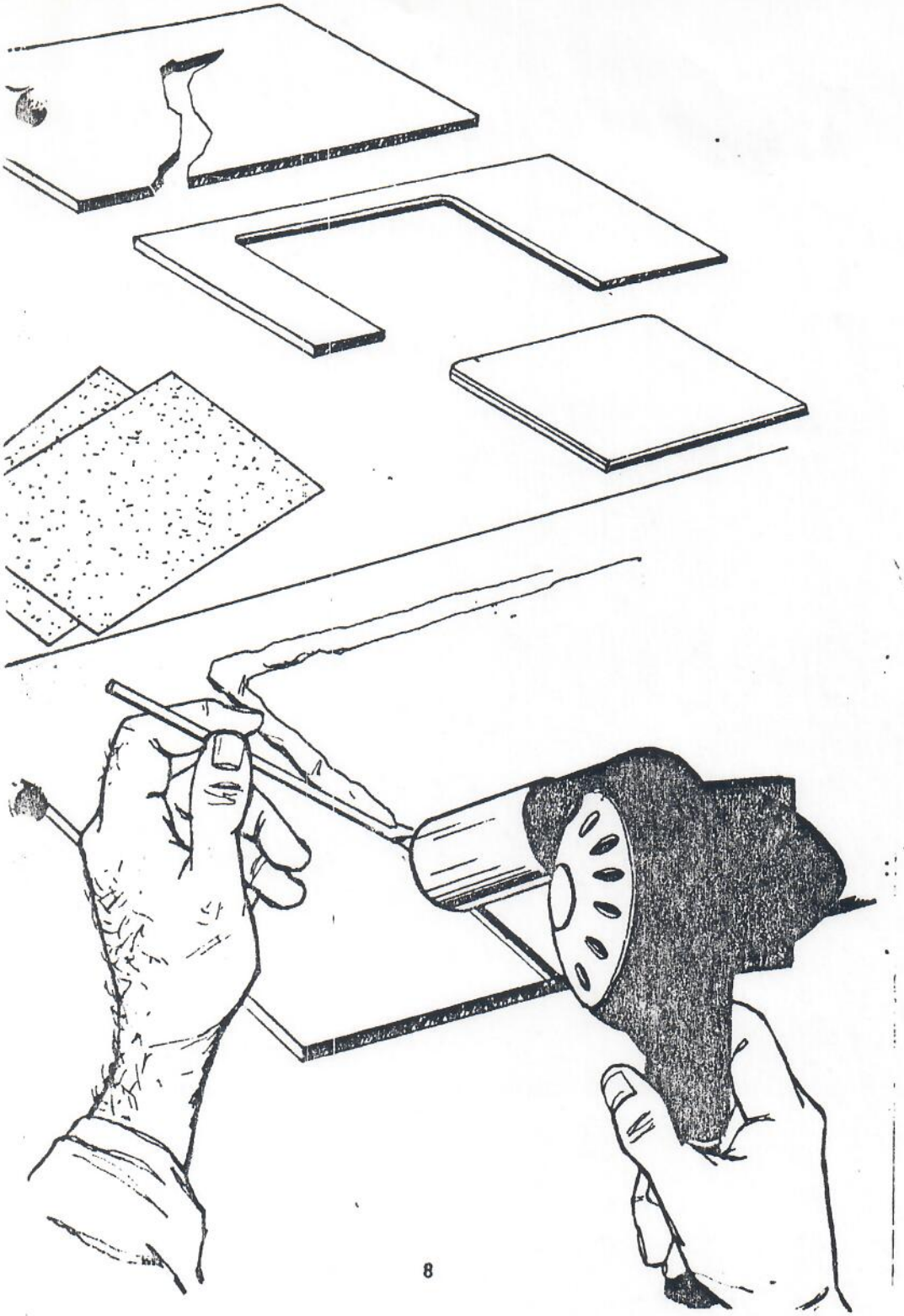

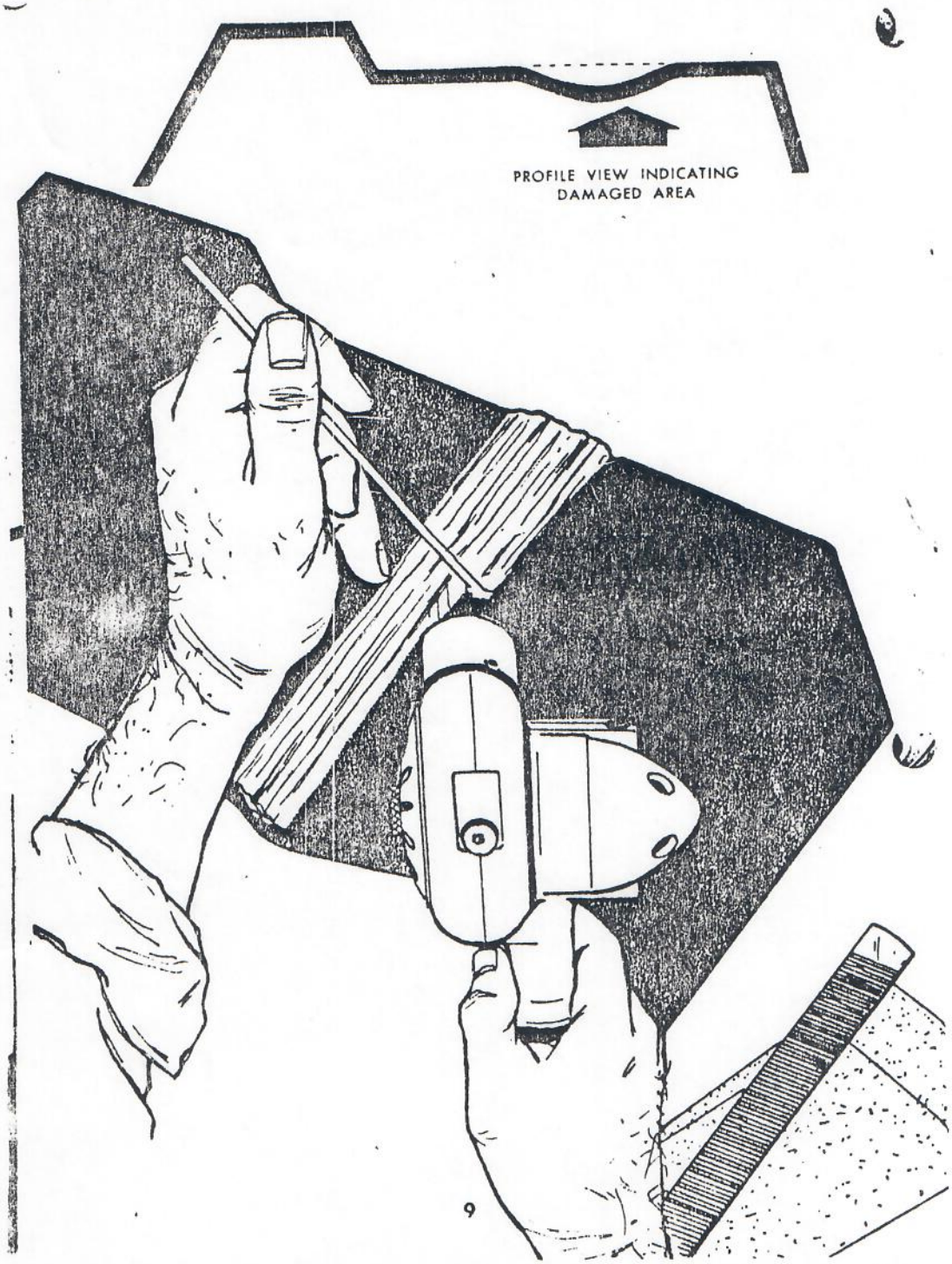
PROFILE VIEW INDICATING
DAMAGED AREA

Blisters and punctures in the ABS surface are most effectively repaired by first removing the damaged section with a hole saw, drill or similar tool, then undercutting the hole perimeter and filling it with Solarite 400. It is suggested that the hole be slightly overfilled and the patching compound be feathered out in the surrounding area. The patch is sanded and finished after the Solarite 400 has cured. Due to the generation of heat in the epoxy patching compound, care should be taken to build up layers less than 1/2 in. in thickness at a time. Successful repairs up to 12 square inches have been made using this procedure

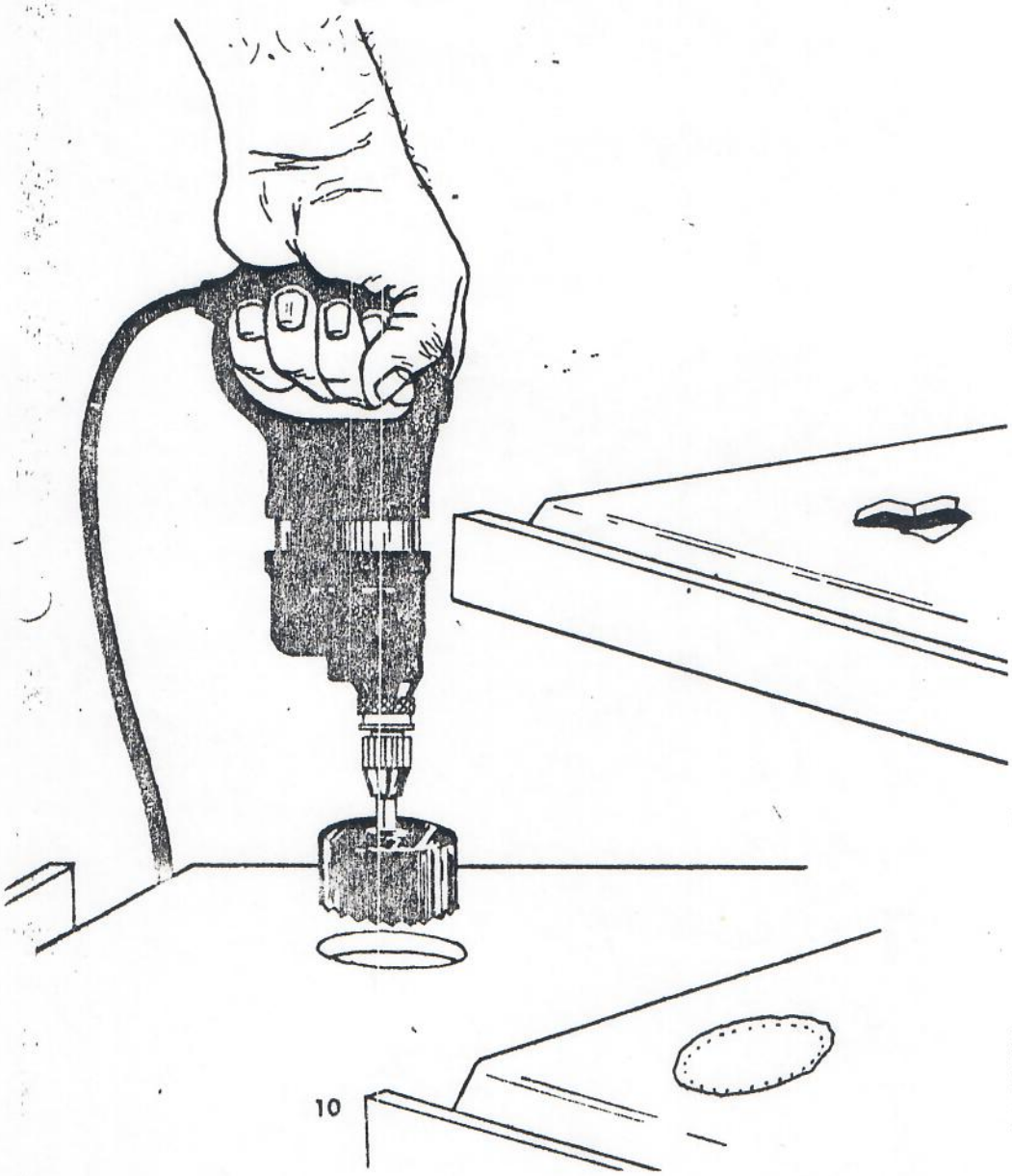

urethane foam within the composite structure (foam sandwich) is dam- damaged portion should be removed and replaced with either an material or pre-cut foam depending on the size of the repair. This he sandwich core material should be accomplished before the ABS surface.

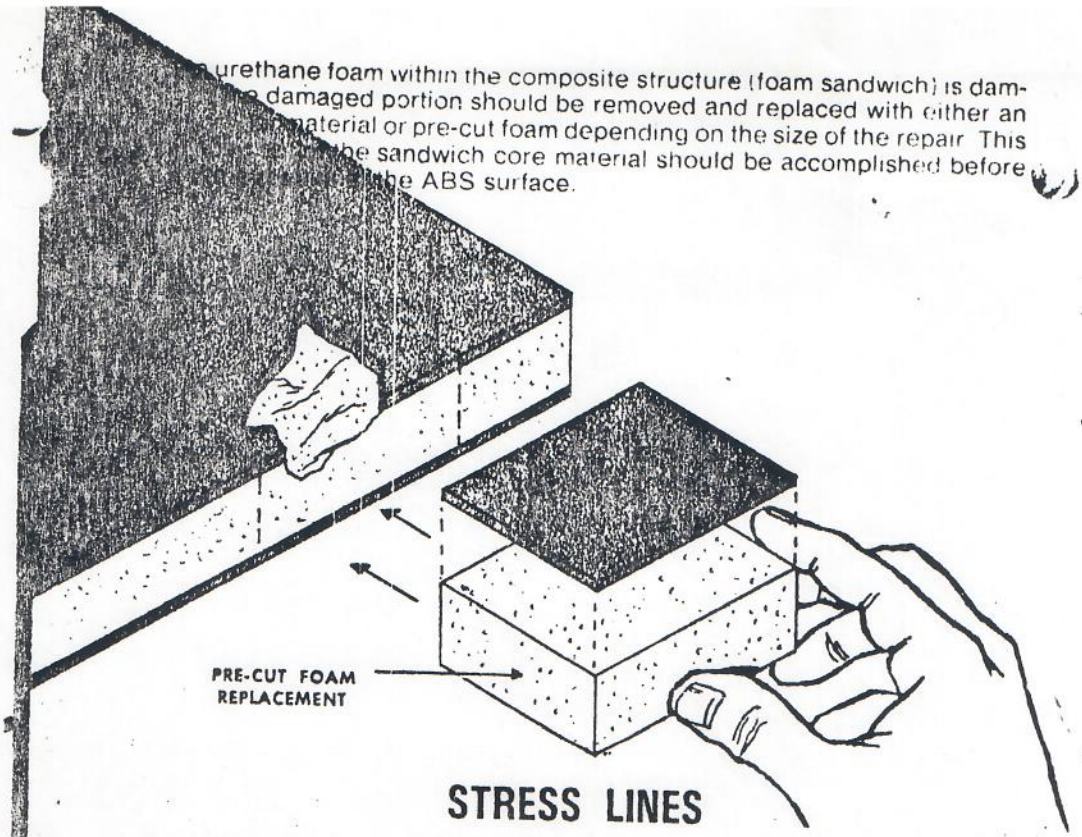

STRESS LINES

Stress lines produce a whitened appearance in a localized area and generally emanate from the severe bending or impacting of ABS. The material can be restored to its original condition and color by gradually heating the affected area with a hot air gun or similar heating device. Care should be exercised not to overheat the plastic.

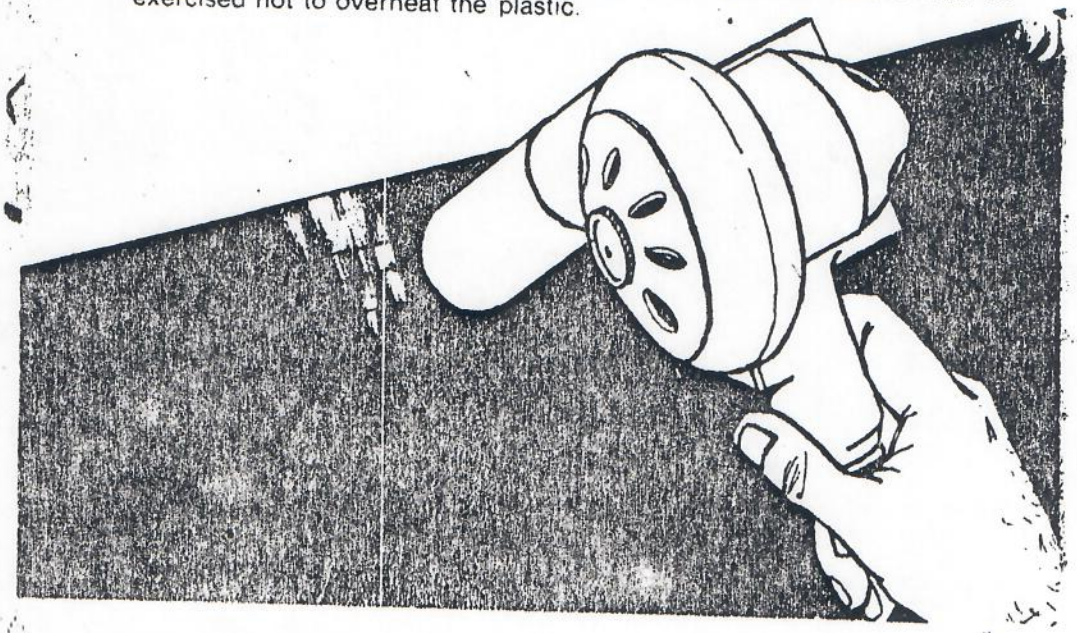

PAINTING THE REPAIR

After the repair has been completed, painting is usually necessary to enhance the appearance of the repaired part. Even though a number of air-drying enamels can be used, there is no one universal paint which will adhere to all grades of CYCOLAC or CYCOLOY. It is therefore highly recommended that reference be made to Borg-Warner Chemicals' coating bulletin PB-136. Alternately, Borg-Warner Chemicals may be contacted for specific recommendations.

This booklet prepared by
BORG-WARNER CHEMICALS
P.O. BOX 68, WASHINGTON, WEST VIRGINIA 26181
for:.